SWING-TOP 0.750



KMC
GLASS

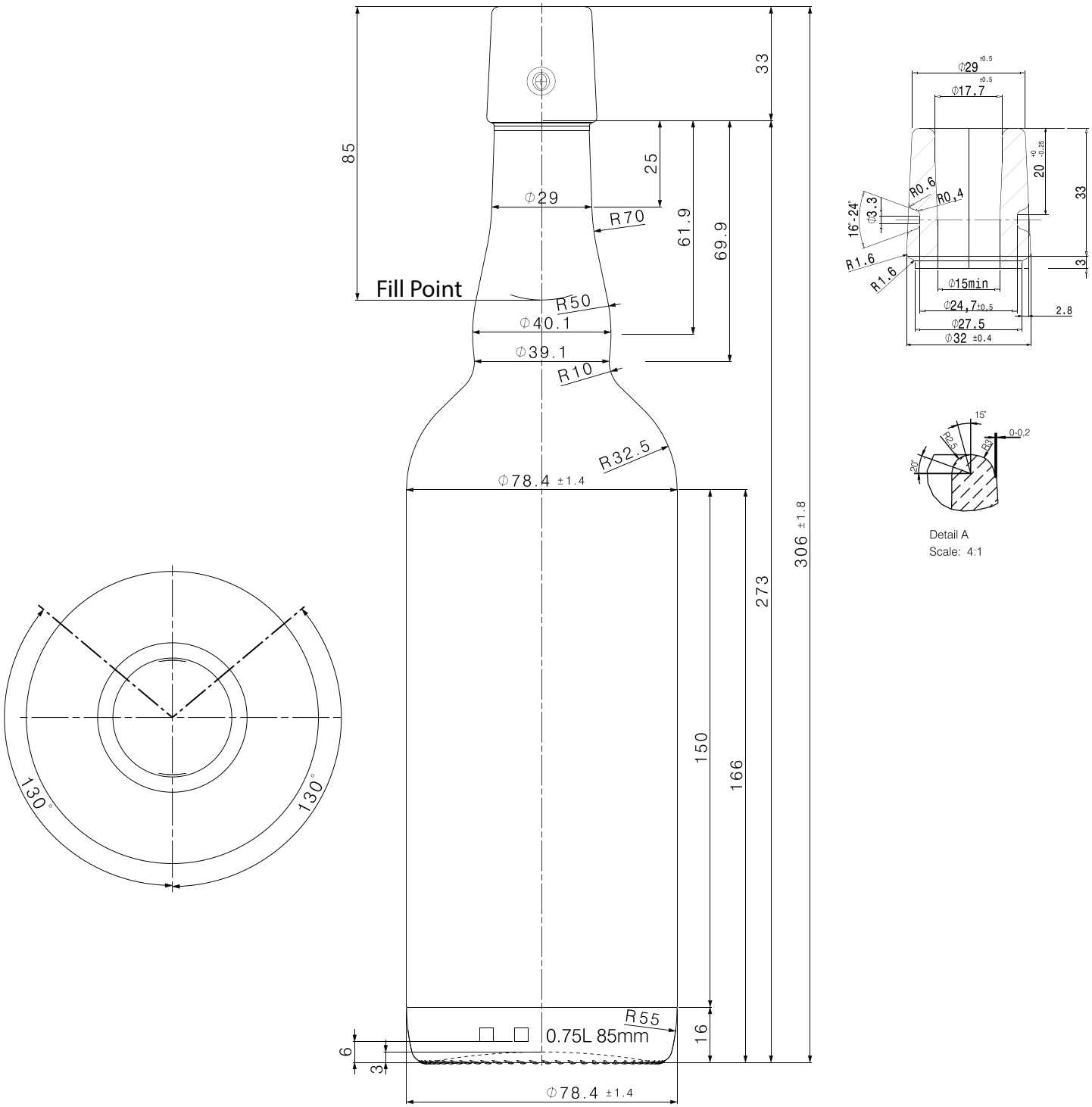

- Swing-Top
- Filling CAP - 750 ml
- Weight - 530 g
- Height - 306 mm
- Diameter - 78.4 mm
- Finish - DIN 6094-3-28
- Color - Amber

www.kmc.glass
sales@kmc.glass

KMC GLASS